462.3.560-10

Vacuum cleaner motor performance

DOMEL®

Vacuum cleaner motors with high efficiency 462.3.560-10 / 1450W / 230V / 50Hz are used for dry aspiration. Technical data and dimensions are given in the table. Vacuum cleaner motors consist of universal commutator motor and single fan stage. The rotor is supported with two ball bearings enabling vertical or horizontal installation of motor.
The motor is designed for insulation class 155 (F) and constructed according to EN 60335-1.

Technical data:

Normal operation:	P_m	>=	1230	W
Vacuum:	p_{max}	>=	28,7 115,3	kPa in H_2O
Air Flow:	Q_{max}	>=	53,0 112,3	dm^3/s CFM
Air Power:	P_{2max}	>=	610	W
Efficiency:	η_{max}	>=	44	%
Mass:	m	=	1,60	kg

Voltage:	230 V
Frequency:	50 Hz
Nominal Power:	1450 W

Max power 1600W

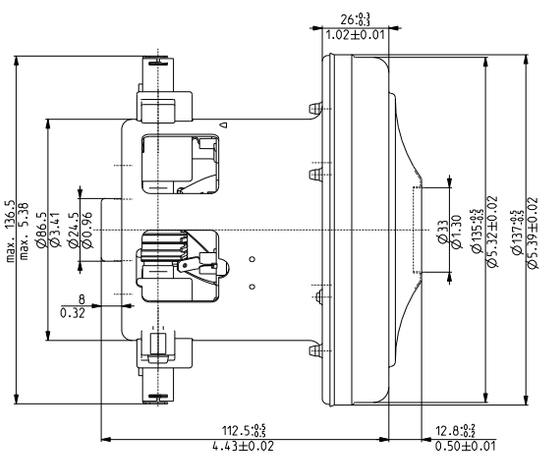

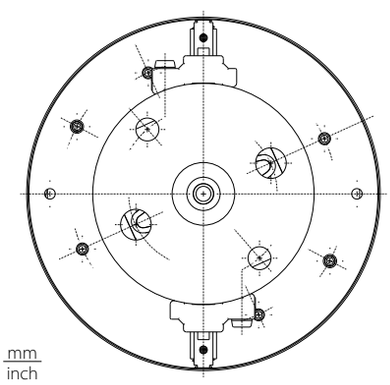

mm
inch

Dimensional and performance data are subject to change without notice.

Orifice		Current	Input Power	Speed	Pressure		Air Flow		Air power	Efficiency
mm	in*	A	W	min^{-1}	kPa	in H_2O	dm^3/s	CFM	W	%
40	1 1/2	7,01	1582	33209	3,3	13,3	55,3	117,1	183	11,6
30	1 1/8	6,80	1537	33674	8,8	35,5	50,1	106,1	442	28,8
23	7/8	6,39	1448	35059	16,4	65,9	39,3	83,4	645	44,5
19	3/4	6,00	1362	36364	21,2	85,0	30,1	63,9	638	46,8
16	5/8	5,60	1274	37957	24,3	97,7	22,8	48,2	553	43,4
13	1/2	5,20	1185	39754	27,1	109,0	15,8	33,5	428	36,2
10	3/8	4,80	1096	41782	28,0	112,6	9,5	20,2	267	24,4
6,5	1/4	4,46	1021	43559	28,5	114,6	4,1	8,7	117	11,5
0	0	4,18	957	46053	30,2	121,4	0,0	0,0	0	0,0

Data above represent the preformance of an average motor sample. Individual data may vary due to normal manufacturing variations.
* Orifice in inch is only approximative.